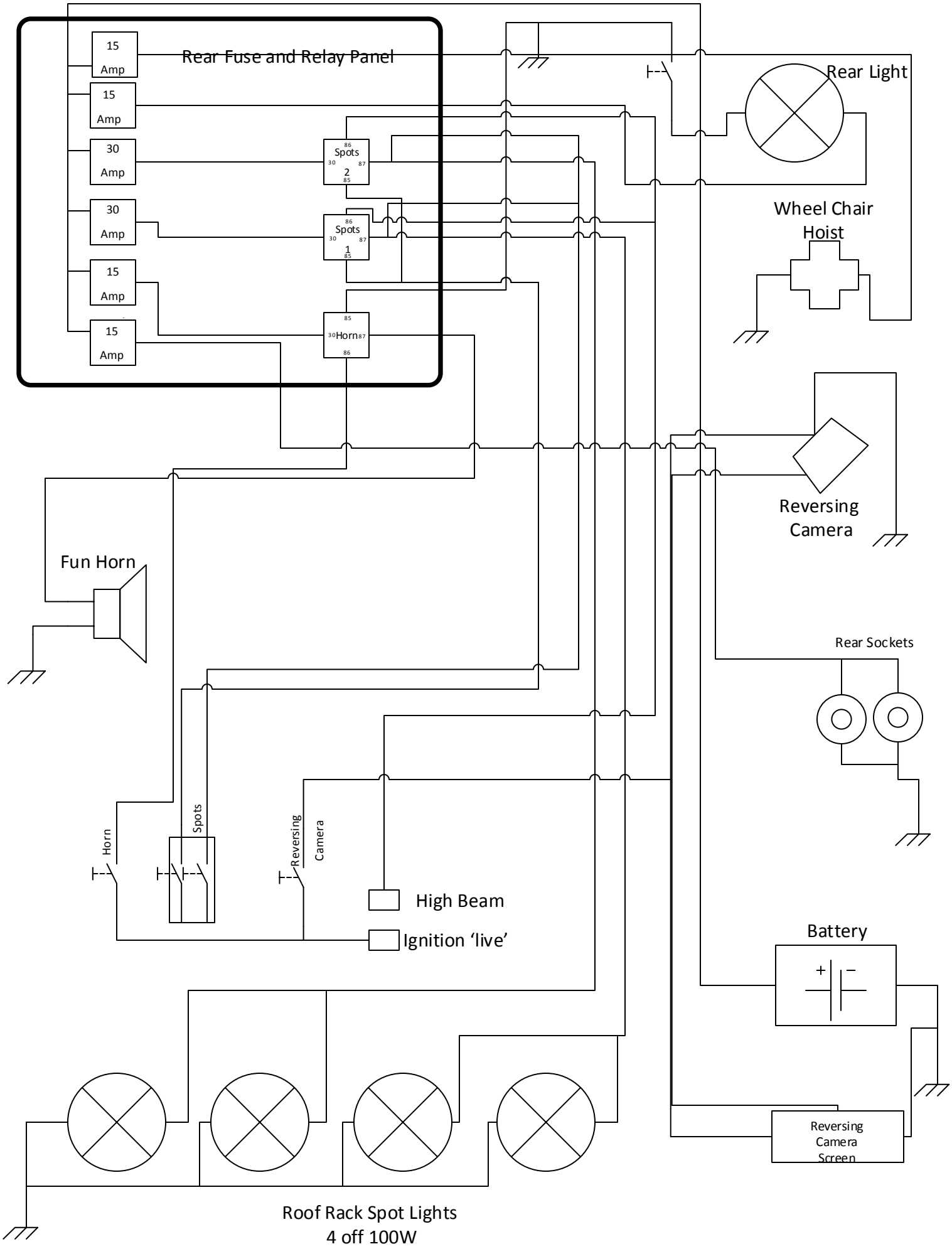
Rear Fuse and Relay Panel
15 Amp
15 Amp
30 Amp
30 Amp
15 Amp
15 Amp
Spots 2
Spots 1
Horn
Rear Light
Wheel Chair Hoist
Reversing Camera
Fun Horn
Rear Sockets
Horn
Spots
Reversing Camera
High Beam
Ignition 'live'
Battery
Reversing Camera Screen
Roof Rack Spot Lights
4 off 100W