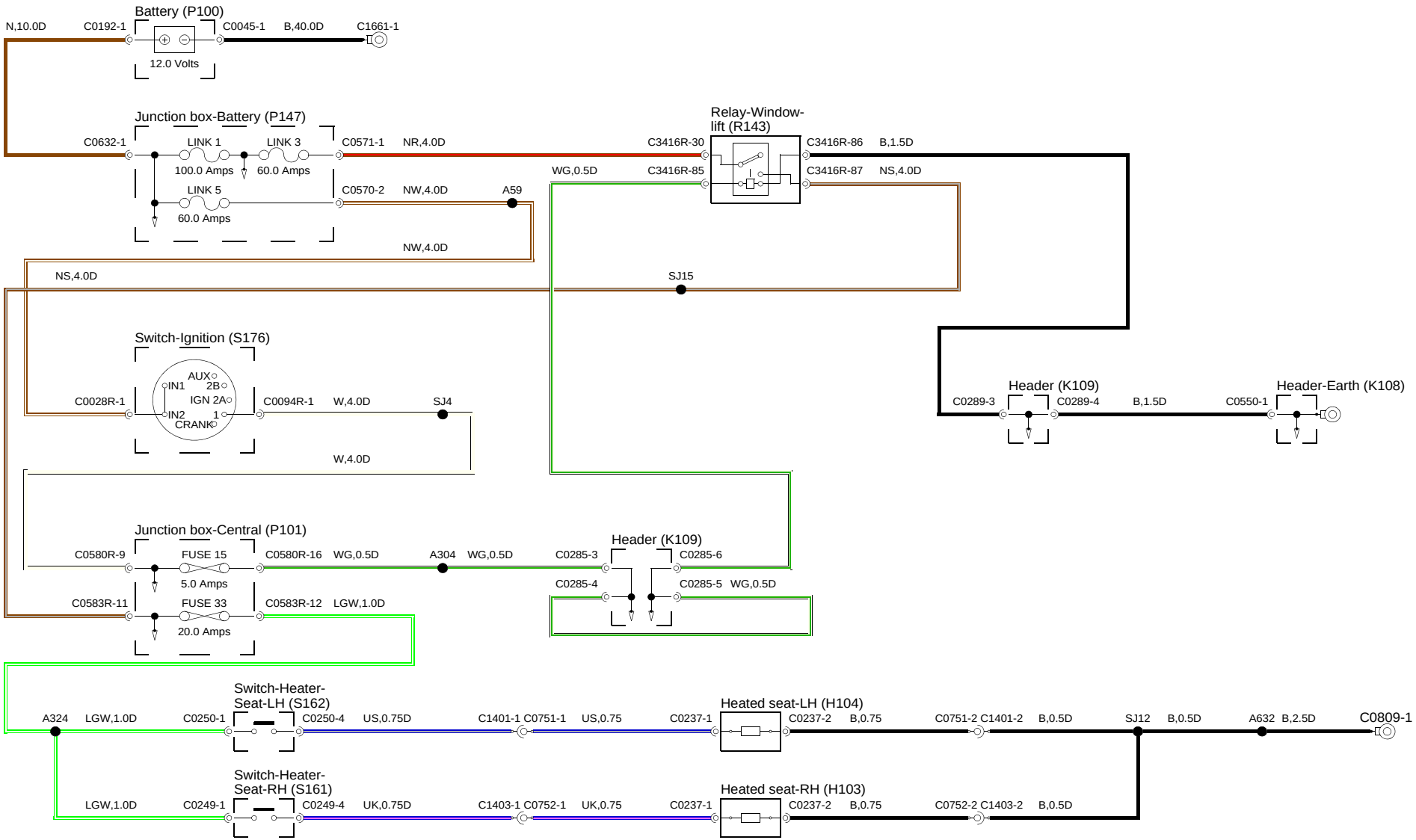
Battery (P100)
N,10.0D
C0192-1
C0045-1
B,40.0D
C1661-1
12.0 Volts
Junction box-Battery (P147)
C0632-1
LINK 1
LINK 3
100.0 Amps
60.0 Amps
C0571-1
NR,4.0D
LINK 5
60.0 Amps
C0570-2
NW,4.0D
A59
NW,4.0D
Relay-Window-lift (R143)
C3416R-30
C3416R-86
B,1.5D
WG,0.5D
C3416R-85
C3416R-87
NS,4.0D
NS,4.0D
SJ15
Switch-Ignition (S176)
AUX
IN1
2B
IGN 2A
IN2
1
CRANK
C0028R-1
C0094R-1
W,4.0D
SJ4
W,4.0D
Header (K109)
C0289-3
C0289-4
B,1.5D
C0550-1
Header-Earth (K108)
Junction box-Central (P101)
C0580R-9
FUSE 15
5.0 Amps
C0580R-16
WG,0.5D
A304
WG,0.5D
C0285-3
C0285-6
C0583R-11
FUSE 33
20.0 Amps
C0583R-12
LGW,1.0D
Header (K109)
C0285-4
C0285-5
WG,0.5D
Switch-Heater-Seat-LH (S162)
A324
LGW,1.0D
C0250-1
C0250-4
US,0.75D
C1401-1
C0751-1
US,0.75
C0237-1
Heated seat-LH (H104)
C0237-2
B,0.75
C0751-2
C1401-2
B,0.5D
SJ12
B,0.5D
A632
B,2.5D
C0809-1
Switch-Heater-Seat-RH (S161)
LGW,1.0D
C0249-1
C0249-4
UK,0.75D
C1403-1
C0752-1
UK,0.75
C0237-1
Heated seat-RH (H103)
C0237-2
B,0.75
C0752-2
C1403-2
B,0.5D